Dear customer,

thank you for deciding to purchase our product. The product fulfils the requirements of effective European and national guidelines.
To maintain the condition of the product and to ensure safe operation, you - as the user - must observe the product notes and the operation manual! They contain important information for the start-up and handling. It is important, therefore, that these documents are archived carefully for referring to information at a later stage.

1. Safety Instructions

We are not responsible for any property damage or personal injury caused by failure to observe these product notes and manual, improper handling or unauthorised modifications.

It can only be installed by a qualified electrician.

Make sure that the item has not been damaged during transport before putting the light into operation. It may not be operated if there are any damages to electrical parts.

The luminaire may only be operated completely with its protective cover.

It may only be operated once removed from the packaging.

The type plate must not be removed.

The connection lines in the building must be disconnected before installation and secured against being switched back on. For this, trip the corresponding fuse switch in the building installation.

Make sure the electrical specifications for the connection lines correspond with the specifications given on the nameplate of this product.

We recommend that you protect the product with a residual-current-operated protective device. Follow all installation regulations applicable at your location.

Make sure that the cables and plugs are not subject to tension or torsional forces and do not bend the cables. Protect all cables and insulation against possible damages.

Output lines should be laid separately and spaced apart from other lines. The power supply cables and the lamp feeders must not cross each other.

Do not allow the product to come into contact with extreme heat or naked flames.

Use the supplied fastening material only when it is suited for the installation background.

The product must not be covered with objects (decorations) or thermally insulating coverings /similar materials.

Before disposal of the packaging material make sure that all components are removed.

Keep packaging material away from the reach of children and pets. The packaging contains small parts that may be swallowed by children.

2. Proper Use

This product is only intended for lighting purposes and may only be operated on normal or non-flammable surfaces.

The use can be done in indoor/outdoor areas.

Make sure that the surface is suitable for permanently and reliably taking the weight of the light.

3. Care

Repairs may only be carried out by a qualified electrician.

Disconnect the entire product from the mains first and allow it to cool down before cleaning or maintaining.

Use a dry or slightly moistened cloth for cleaning.

Never use any chemicals, flammable cleaning agents or abrasives. These may cause damage to the surface coating and/or the insulators.

4. Faulty Function

Light switched on at the switch?

Transformer mounted and connected properly?

If available; remote control intact? Check the batteries.

Check the connected lines.

Lamp defective?

5. Changing Lamps

The light source of this lamp is not replaceable. When the light source has reached its end of life, replace the entire luminaire.

6. Storage and Disposal

Used electronic devices must be brought back to public collection points and must not be disposed of as household waste.

Storage in a dry and clean environment. Do not strain the product mechanically during storage.

Montageanleitung /
Mounting Instruction

Stehleuchte, Bessma / Floor lamp Bessma
220-240V AC/50-60Hz, 9,00 W

Achtung! Für diese Arbeiten müssen Sie die Spannungsversorgung trennen.
Attention! For this work you must turn off the power supply.

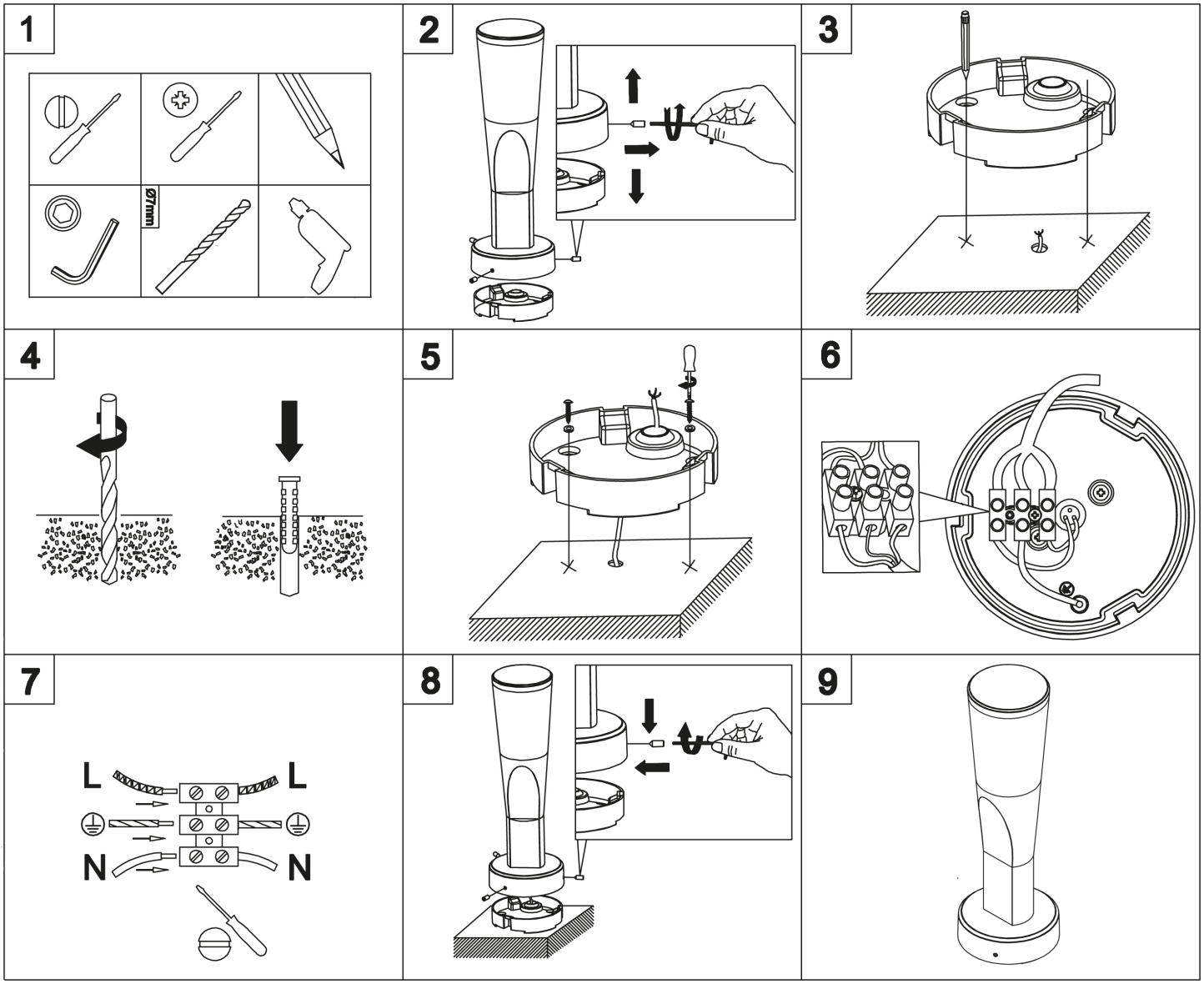

N = Blau • ⏚ = Gelb / Grün • L = Braun
N = Blue • ⏚ = Yellow / Green • L = Brown

Dear customer,

thank you for deciding to purchase our product. The product fulfils the requirements of effective European and national guidelines.
To maintain the condition of the product and to ensure safe operation, you - as the user - must observe the product notes and the operation manual! They contain important information for the start-up and handling. It is important, therefore, that these documents are archived carefully for referring to information at a later stage.

1. Safety Instructions

We are not responsible for any property damage or personal injury caused by failure to observe these product notes and manual, improper handling or unauthorised modifications.

It can only be installed by a qualified electrician.

Make sure that the item has not been damaged during transport before putting the light into operation. It may not be operated if there are any damages to electrical parts.

The luminaire may only be operated completely with its protective cover.

It may only be operated once removed from the packaging.

The type plate must not be removed.

The connection lines in the building must be disconnected before installation and secured against being switched back on. For this, trip the corresponding fuse switch in the building installation.

Make sure the electrical specifications for the connection lines correspond with the specifications given on the nameplate of this product.

We recommend that you protect the product with a residual-current-operated protective device. Follow all installation regulations applicable at your location.

Make sure that the cables and plugs are not subject to tension or torsional forces and do not bend the cables. Protect all cables and insulation against possible damages.

Output lines should be laid separately and spaced apart from other lines. The power supply cables and the lamp feeders must not cross each other.

Do not allow the product to come into contact with extreme heat or naked flames.

Use the supplied fastening material only when it is suited for the installation background.

The product must not be covered with objects (decorations) or thermally insulating coverings /similar materials.

Before disposal of the packaging material make sure that all components are removed.

Keep packaging material away from the reach of children and pets. The packaging contains small parts that may be swallowed by children.

2. Proper Use

This product is only intended for lighting purposes and may only be operated on normal or non-flammable surfaces.

The use can be done in indoor/outdoor areas.

Make sure that the surface is suitable for permanently and reliably taking the weight of the light.

3. Care

Repairs may only be carried out by a qualified electrician.

Disconnect the entire product from the mains first and allow it to cool down before cleaning or maintaining.

Use a dry or slightly moistened cloth for cleaning.

Never use any chemicals, flammable cleaning agents or abrasives. These may cause damage to the surface coating and/or the insulators.

4. Faulty Function

Light switched on at the switch?

Transformer mounted and connected properly?

If available; remote control intact? Check the batteries.

Check the connected lines.

Lamp defective?

5. Changing Lamps

The light source of this lamp is not replaceable. When the light source has reached its end of life, replace the entire luminaire.

6. Storage and Disposal

Used electronic devices must be brought back to public collection points and must not be disposed of as household waste.

Storage in a dry and clean environment. Do not strain the product mechanically during storage.

Montageanleitung /
Mounting Instruction

Stehleuchte, Bessma / Floor lamp Bessma
220-240V AC/50-60Hz, 9,00 W

Achtung! Für diese Arbeiten müssen Sie die Spannungsversorgung trennen.
Attention! For this work you must turn off the power supply.

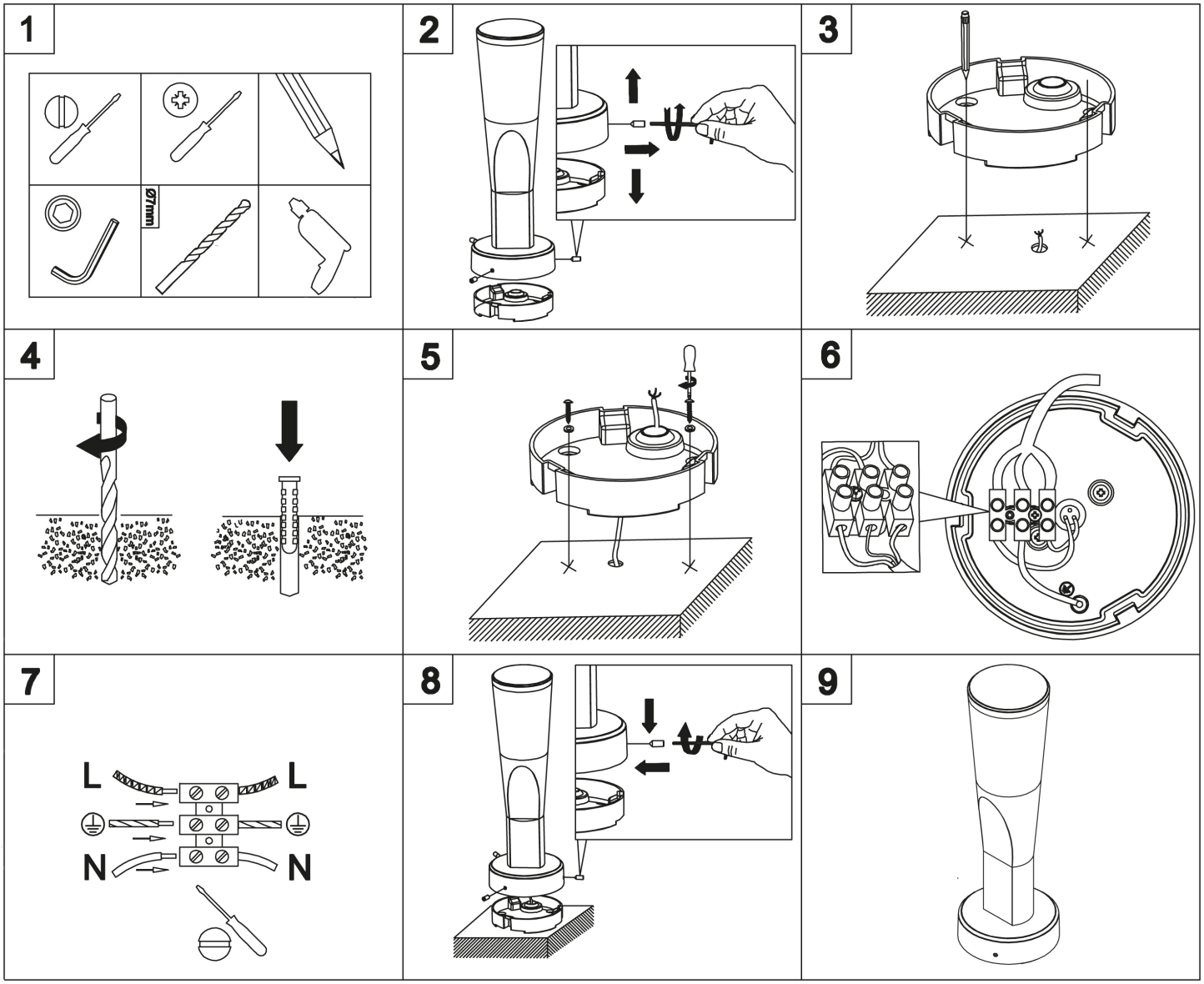

N = Blau • ⏚ = Gelb / Grün • L = Braun
N = Blue • ⏚ = Yellow / Green • L = Brown